Hansen Corporation
a Minebea Group Company

100 Years and Counting . . .

Motorized Slip Rings

Motorized Slip Rings

STANDARD FEATURES:

- This patented assembly-a synchron exclusive-combines rotating motion and electrical power in a single, compact 2-wire unit
- AC or DC Voltage
- Voltages from 12V to 240V available
- Standard speed available 0.8 - 12.0 RPM
- Available with clockwise or counterclockwise shaft rotation
- Slip ring assembly has special double brush and dual contact to assure continuous transmission of electrical power
- Two-way protective clutch available 6 RPM or slower
- AC or DC voltage can be applied to the slip ring portion of the assembly

TYPICAL APPLICATIONS:

- POP Displays
- Advertising Signs

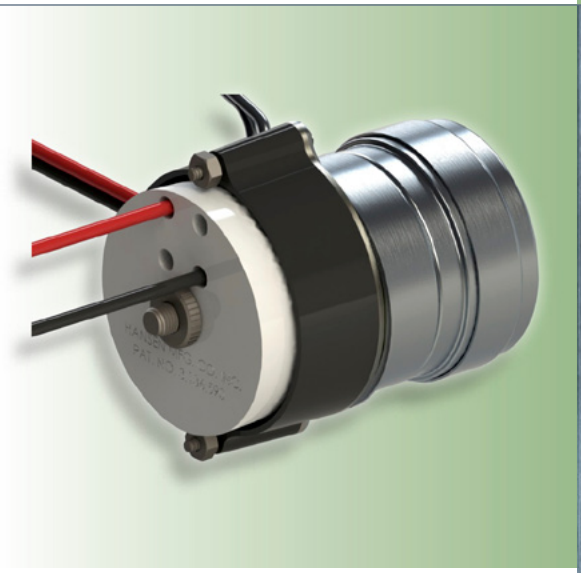

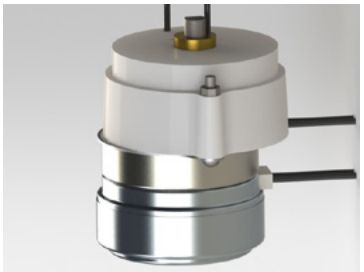

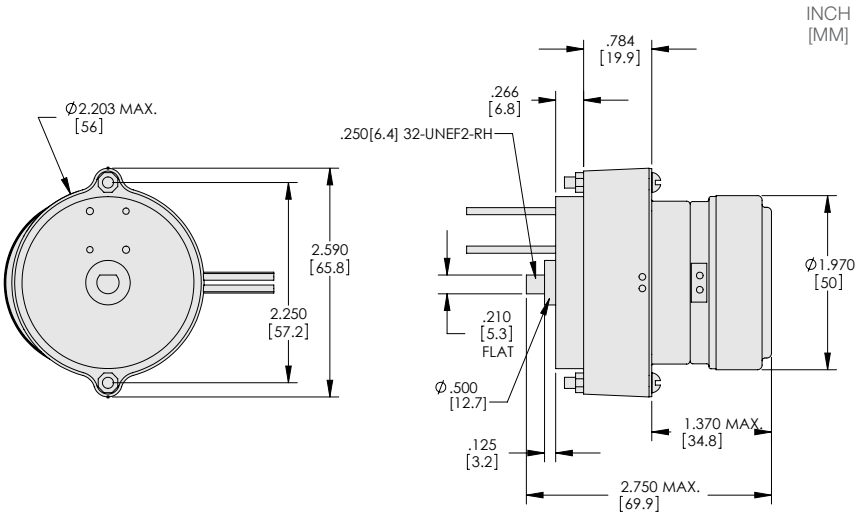

PERFORMANCE

RATINGS	
AMPS	VOLTS
5.0	120 VAC
2.5	240 VAC
35.0	12 VDC
17.5	24 VDC

Hansen Corporation
901 South First Street
Princeton, IN 47670-2369

Tel: (812) 385-3415
Fax: (812) 385-3013

hansen-motor.com

053113